AS0 SERIES
Current Sensing Switches

AS0 Series Low-current Current Sensing Switches are specialized current sensing switches that combine an ultra-sensitive current transformer and signal conditioning electronics into a single package for sensing AC current from 3–350 mA. Useful for signal or lamp status monitoring, detecting low level fault currents or fan status proofing, the AS0 Series features solid-state outputs and jumper-selectable ranges, which make it a versatile choice for low-current status indication applications.

Current Sensing Switch Applications

Fan Monitoring
- Fan status in heating and drying applications.
- Identify lamp outages or other malfunctions through changes in current consumption.

Fractional HP Motors
- Ideal for monitoring small motors used in critical applications, for example, fan status proofing on a crucial cooling fan.

Fault Current Sensing
- Detects extremely low levels of current resulting from fault conditions.

Current Sensing Switch Features

Wide Range of Output Options
- Dependable, solid-state relay N.O. or N.C. contacts rated at 240 VAC or 30 VDC.
- Compatible with most automation controllers.

Isolated Inputs and Outputs
- Inductive sensing eliminates insertion loads on monitored circuits, effectively isolating it from the unit.
- Isolated outputs simplify wiring and enhance safety.

Adjustable Setpoints
- Setpoints are field-adjustable from 3 mA to 350 mA, speeding installation and allowing for tailored applications.

UL, CUL and CE Approval
- Accepted worldwide.

Status Alarming

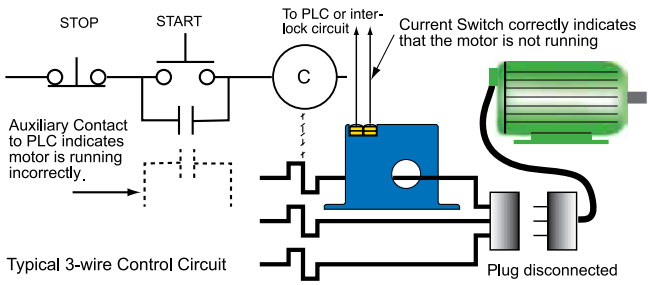

For additional Application Examples, go to www.nktechnologies.com/applications

OEMs Test & Evaluation Units for OEMs
Free program expedites evaluation process. See page 1 for details.

NK Technologies
3511 Charter Park Drive • San Jose, CA 95136
800.959.4014 • www.nktechnologies.com • sales@nktechnologies.com

Current Sensing Switch Dimensions

Case

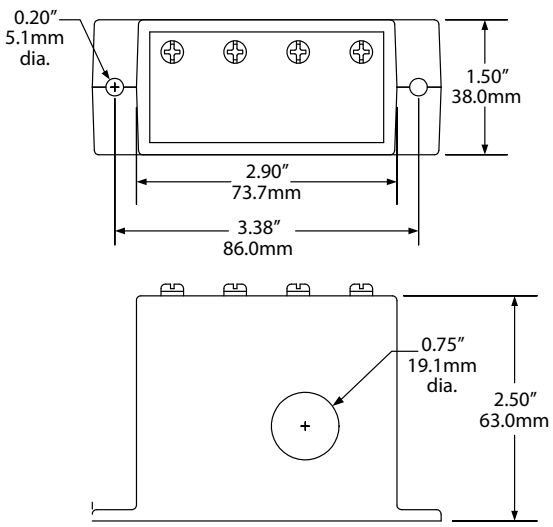

Current Sensing Switch Specifications

Power Supply	Operates from ±20% of nominal voltages
Nominal Voltages	120 VAC (50–400 Hz) or 24 VAC/DC
Power Consumption	2.5 Watts
Output Rating	• AC Version: 1 A @ 240 VAC • DC Version: 0.15 A @ 30 VDC
Response Time	• 150 ms @ 5% above setpoint • 100 ms @ 50% above setpoint
Setpoint Range	• Low Range: 3–15 mA field-adjustable • High Range: 15–350 mA field-adjustable
Max. Input	10 A
Isolation Voltage	UL listed to 1270 VAC
Frequency Range	50–400 Hz (Monitored Circuit)
Case	UL94 V0 Flammability Rated
Environmental	-4 to 122°F (-20 to 50°C) 0–95% RH, non-condensing
Listings	UL listed (USA and Canada), most models

Current Sensing Switch Connections

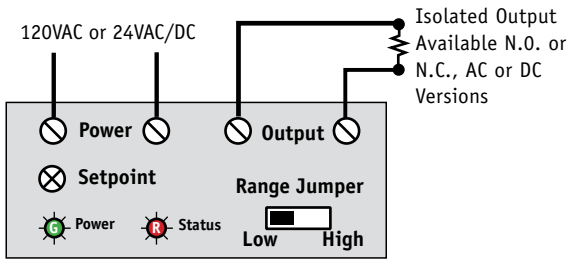

Notes:
Terminals are #6 screws.
Use up to 14 AWG solid or stranded.
Power connections are not polarity sensitive.
DC output connections are polarity sensitive.

Current Sensing Switch Ordering Information

Sample Model Number: AS0-NODC-120
Ultra low current sensing switch, normally open solid-state DC output and 120 VAC power supply.

	(1)					(2)		
AS0 –					–			

(1) Output Type

NCAC	Normally Closed, 1 A @ 240 VAC
NOAC	Normally Open, 1 A @ 240 VAC
NCDC	Normally Closed, 0.15 A @ 30 VDC
NODC	Normally Open, 0.15 A @ 30 VDC

(2) Power Supply

24U	24 VAC/DC
120	120 VAC